Any Questions
or Concerns
PH: (734) 697-3000

E-MAIL: www.hlffurniture.com

CASEWORK™

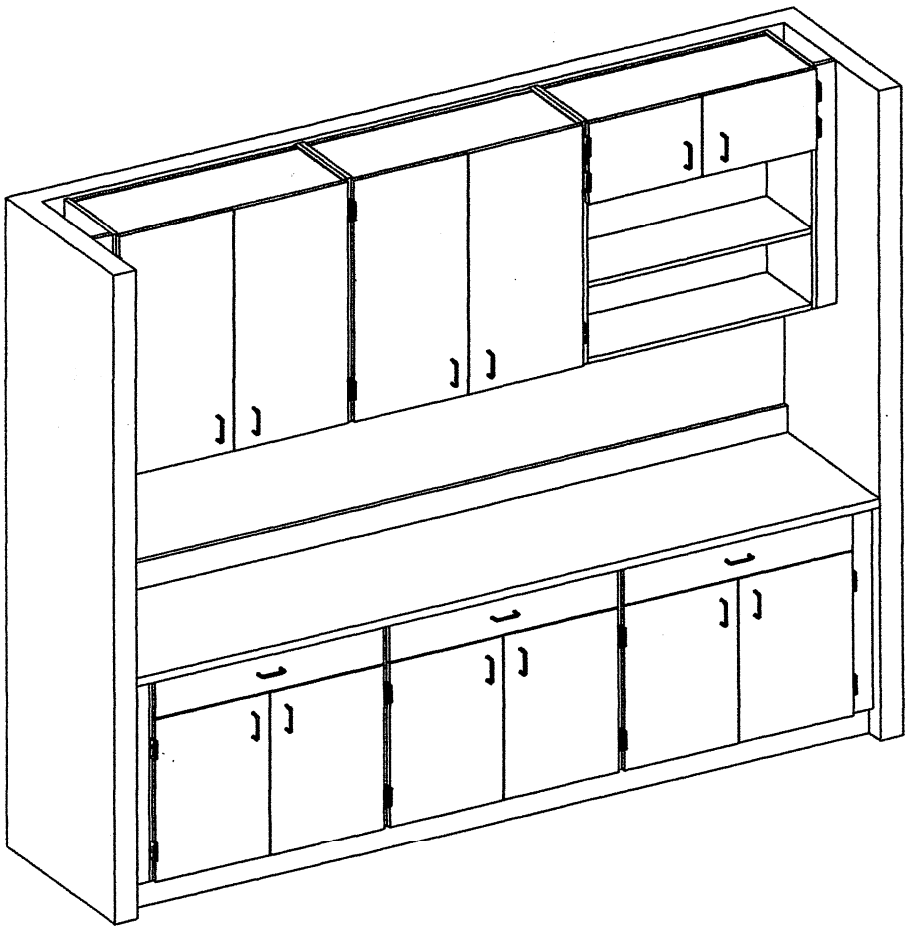

EDUCATION

HEALTHCARE

BUSINESS

Application Guide

Effective Date: 2-12-03

HLF FURNITURE

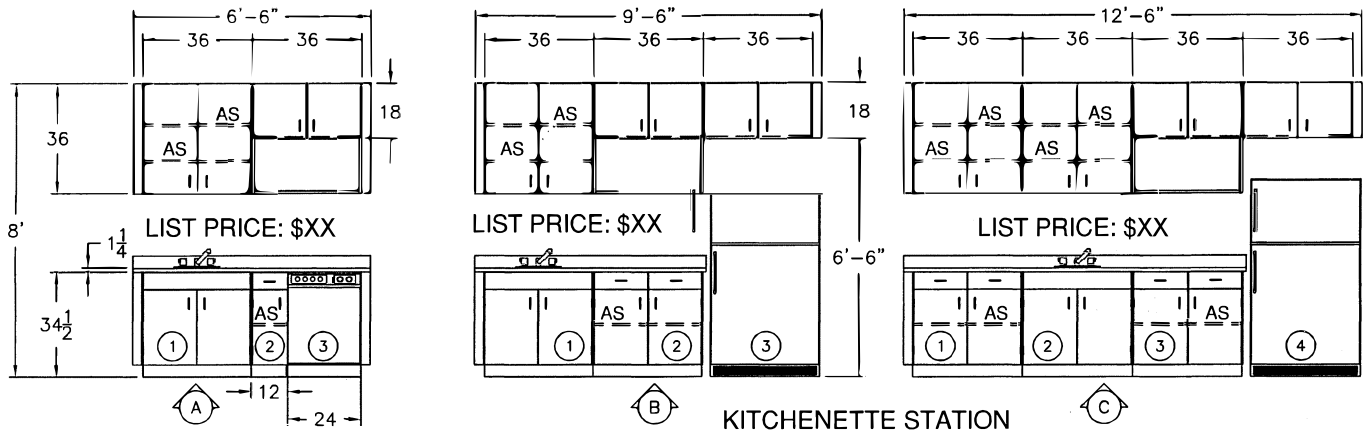

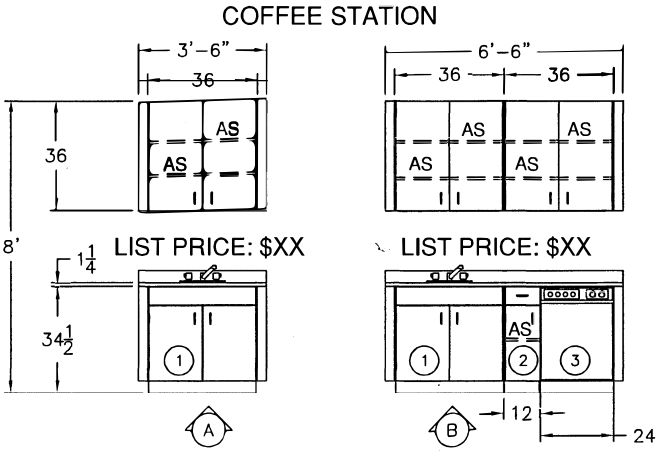

NOTE:
- APPLIANCES SHOWN ARE NOT INCLUDED

HLF FURNITURE

KITCHENETTE/COFFEE STATIONS

PROJECT: CASEWORK STANDARDS

DEALER: #

ACK #:
REF.:
ELEV.:

NOTES:
-ALL DIMENSIONS IN INCHES
-DRAWING NOT TO SCALE

DRAWN: D.BRANUM
DATE: 1-3-03
DRAWING #: 1

KITCHENETTE STATION OPTIONS:

A - 6'-6" O.A.L.

1. SINK BASE CABINET AND UPPER CABINET WITH ADJ. SHELVES.
2. SMALL BASE CABINET WITH 24" OPENING AND UPPER CABINET WITH MICROWAVE SHELF.

- FILLERS PROVIDED

B - 9'-6" O.A.L.

1. SINK BASE CABINET AND UPPER CABINET WITH ADJ. SHELVES.
2. BASE CABINET AND UPPER CABINET WITH MICROWAVE SHELF.
3. 36" OPENING WITH UPPER CABINET

- FILLERS PROVIDED

C 12'-6" O.A.L.

1. BASE CABINET AND UPPER CABINET WITH ADJ. SHELVES.
2. SINK BASE CABINET AND UPPER CABINET WITH ADJ. SHELVES.
3. BASE CABINET AND UPPER CABINET WITH MICROWAVE SHELF.
4. 36" OPENING WITH UPPER CABINET

- FILLERS PROVIDED

COFFEE STATION OPTIONS:

A - 3'-6" O.A.L.

1. SINK BASE CABINET AND UPPER CABINET WITH ADJ. SHELVES.

- FILLERS PROVIDED

B - 6'-6" O.A.L.

1. SINK BASE CABINET AND UPPER CABINET WITH ADJ. SHELVES.
2. SMALL BASE CABINET WITH 24" OPENING AND UPPER CABINET WITH MICROWAVE SHELF

- FILLERS PROVIDED

HLF FURNITURE

KITCHENETTE/COFFEE STATION NOTES

PROJECT: CASEWORK STANDARDS

DEALER: #

ACK #:
REF.:
ELEV.:

NOTES:
-ALL DIMENSIONS IN INCHES
-DRAWING NOT TO SCALE

DRAWN: *D.BRANUM*
DATE: *1-3-03*
DRAWING #: *1a*

NO.	QTY	HLF PART NO.	DISCRIPTION
1	8	03-71-001-001	96mm BRUSHED CHROME D-PULL
2	14	03-24-374	5 KNUCKLE HINGE BRUSHED CHROME

LIST PRICE: $XX

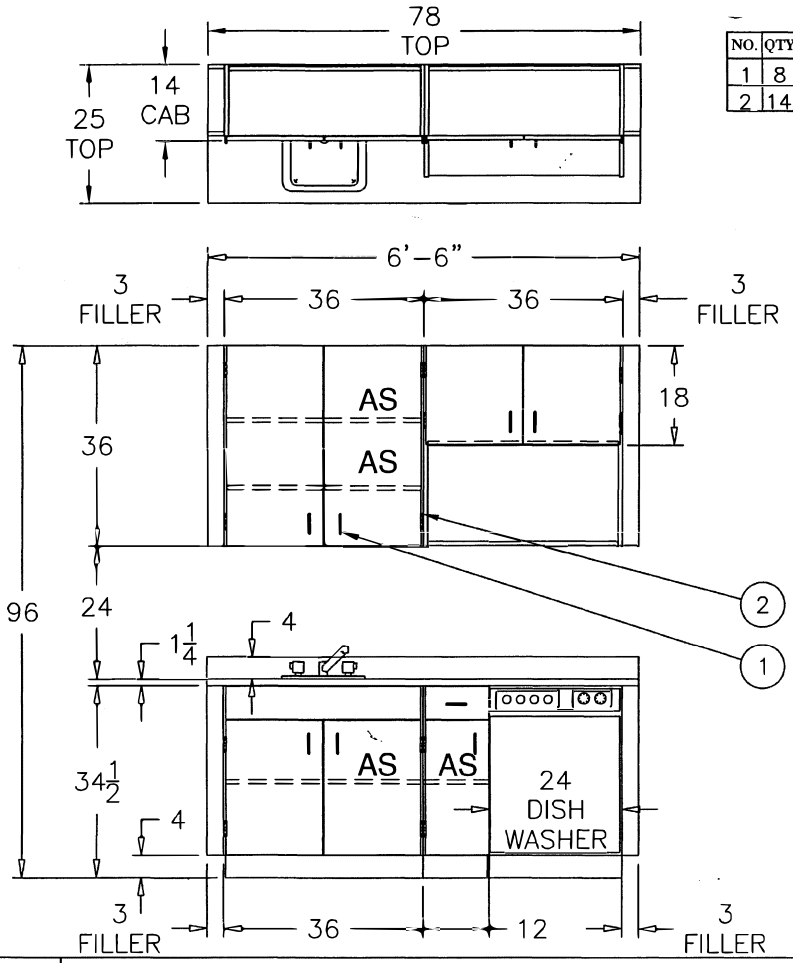

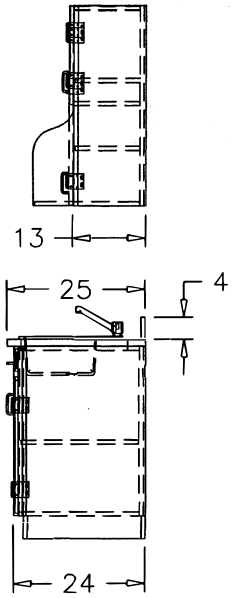

HLF FURNITURE

KITCHENETTE STATION #1

PROJECT: CASEWORK

DEALER: #

ACK #:
REF.:
ELEV.:

NOTES:
-ALL DIMENSIONS IN INCHES
-DRAWING NOT TO SCALE

DRAWN: D.BRANUM
DATE: 1-2-03
DRAWING #: 1

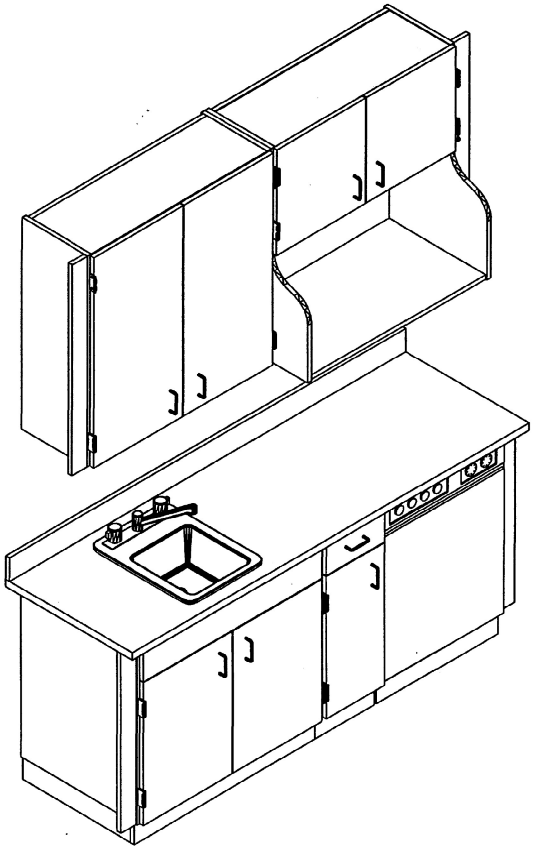

HLF FURNITURE

KITCHENETTE STATION #1

PROJECT: *CASEWORK*

DEALER: #

ACK #:
REF.:
ELEV.:

NOTES:
-ALL DIMENSIONS IN INCHES
-DRAWING NOT TO SCALE

DRAWN: *D.BRANUM*
DATE: *1-2-03*
DRAWING #: **1a**

LIST PRICE: $XX

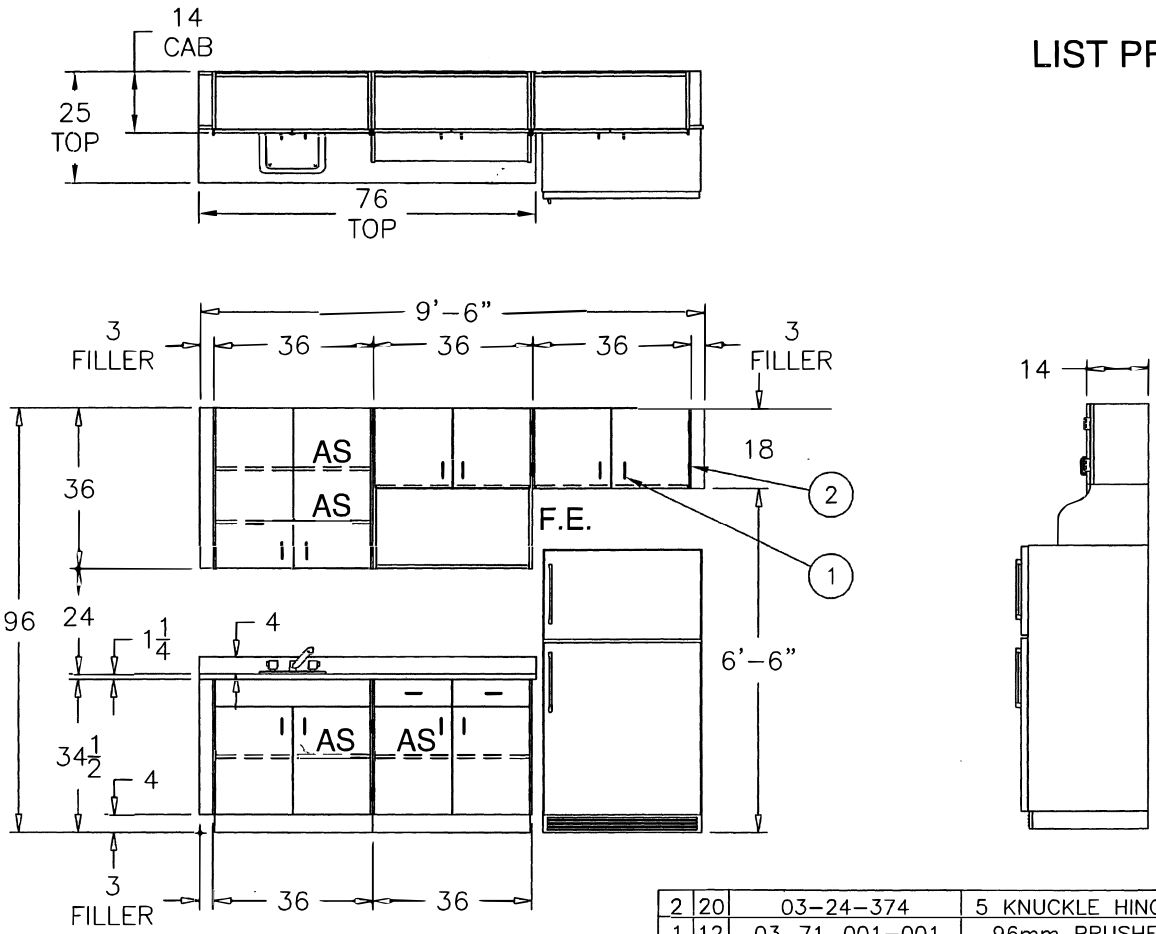

NO.	QTY	HLF PART NO.	DISCRIPTION
2	20	03-24-374	5 KNUCKLE HINGE BRUSHED CHROME
1	12	03-71-001-001	96mm BRUSHED CHROME D-PULL

HLF FURNITURE

KITCHENETTE STATION #2

PROJECT: CASEWORK

DEALER: #

ACK #:
REF.:
ELEV.:

NOTES:
-ALL DIMENSIONS IN INCHES
-DRAWING NOT TO SCALE

DRAWN: D.BRANUM
DATE: 1-2-03
DRAWING #: 2

LIST PRICE: $XX

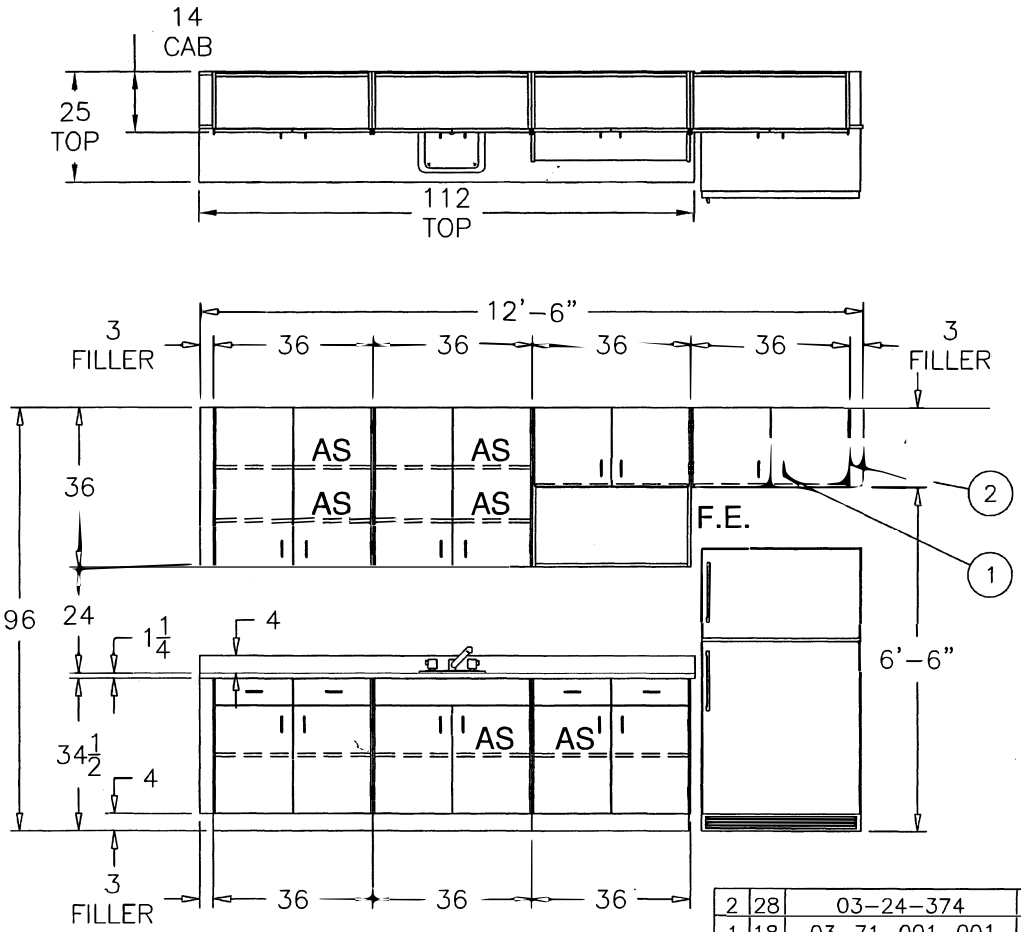

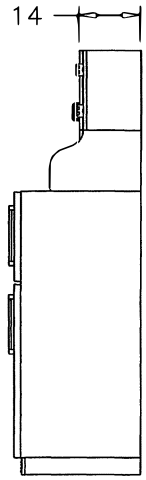

NO.	QTY	HLF PART NO.	DISCRIPTION
2	28	03-24-374	5 KNUCKLE HINGE BRUSHED CHROME
1	18	03-71-001-001	96mm BRUSHED CHROME D-PULL

HLF FURNITURE

KITCHENETTE STATION #3

PROJECT: CASEWORK

DEALER: #

ACK #:

REF.:

ELEV.:

NOTES:
-ALL DIMENSIONS IN INCHES
-DRAWING NOT TO SCALE

DRAWN: D.BRANUM

DATE: 1-2-03

DRAWING #: 3

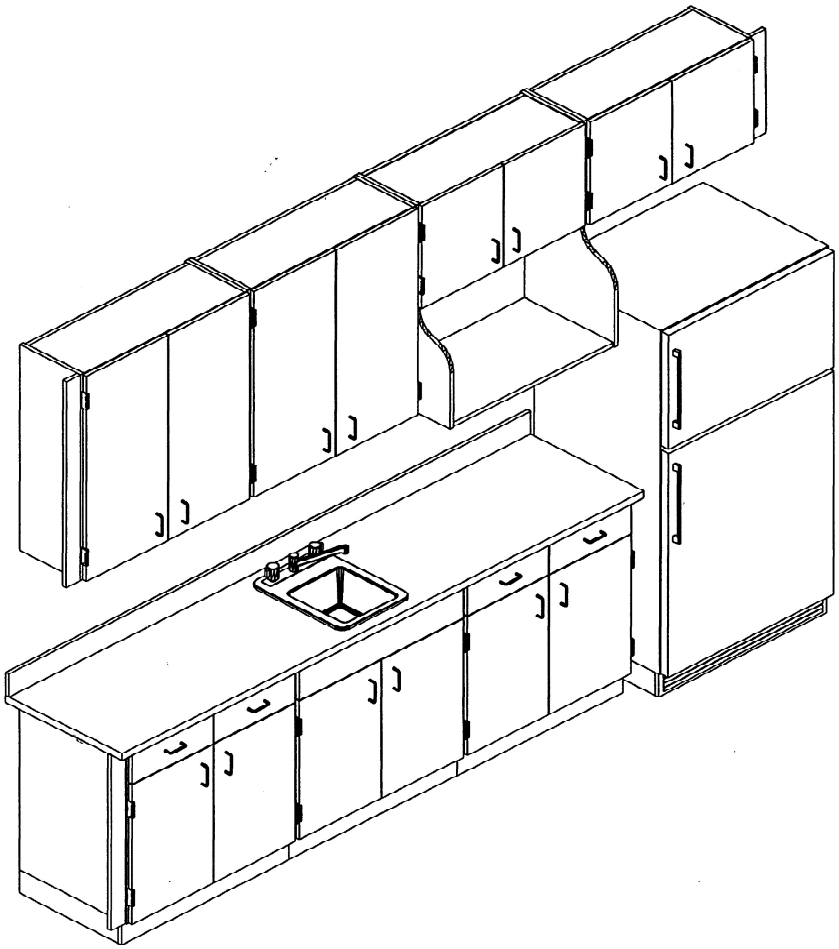

HLF FURNITURE

KITCHENETTE STATION #3

PROJECT: *CASEWORK*

DEALER: *#*

ACK #:
REF.:
ELEV.:

NOTES:
-ALL DIMENSIONS IN INCHES
-DRAWING NOT TO SCALE

DRAWN: *D.BRANUM*
DATE: *1-2-03*
DRAWING #: *3a*

LIST PRICE: $XX

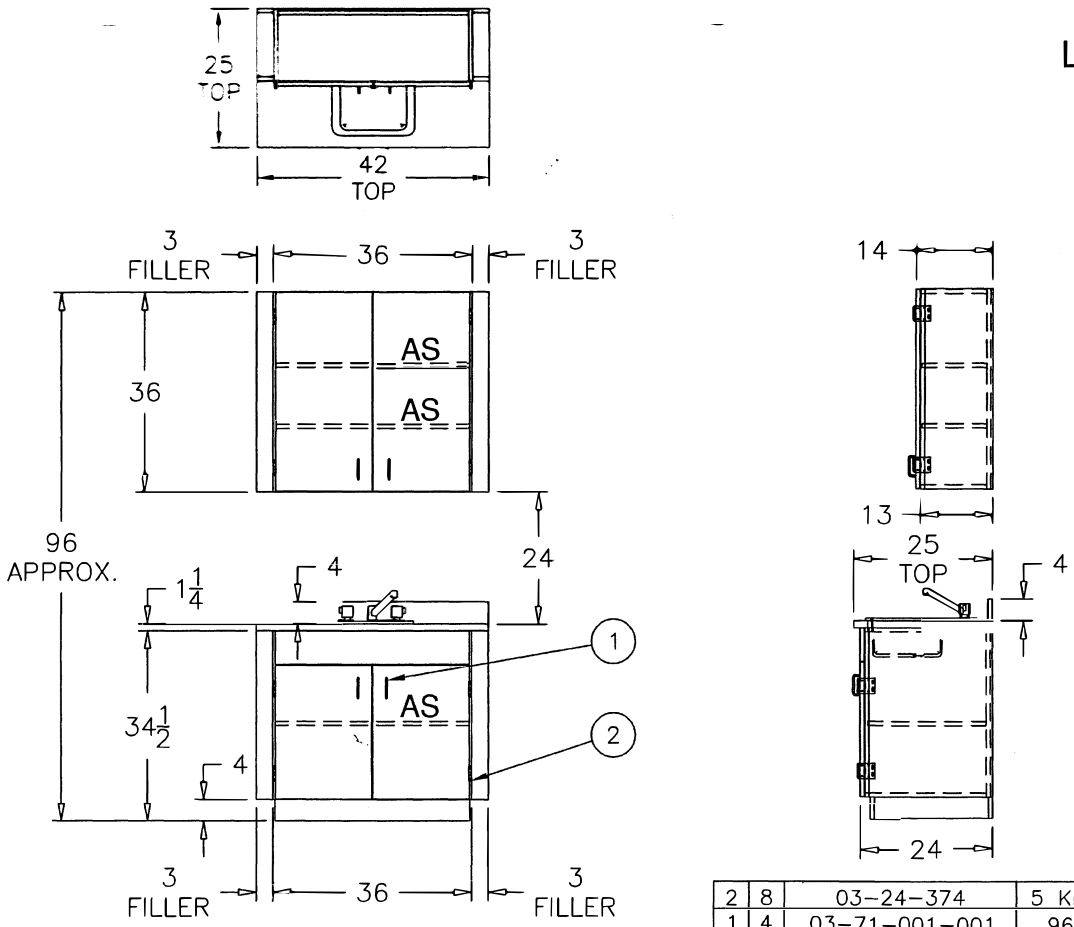

NO.	QTY	HLF PART NO.	DISCRIPTION
2	8	03-24-374	5 KNUCKLE HINGE BRUSHED CHROME
1	4	03-71-001-001	96mm BRUSHED CHROME D-PULL

HLF FURNITURE

COFFEE STATION #1

PROJECT: *CASEWORK*

DEALER: #

ACK #:
REF.:
ELEV.:

NOTES:
-ALL DIMENSIONS IN INCHES
-DRAWING NOT TO SCALE

DRAWN: *D.BRANUM*
DATE: *12-31-02*
DRAWING #: *1*

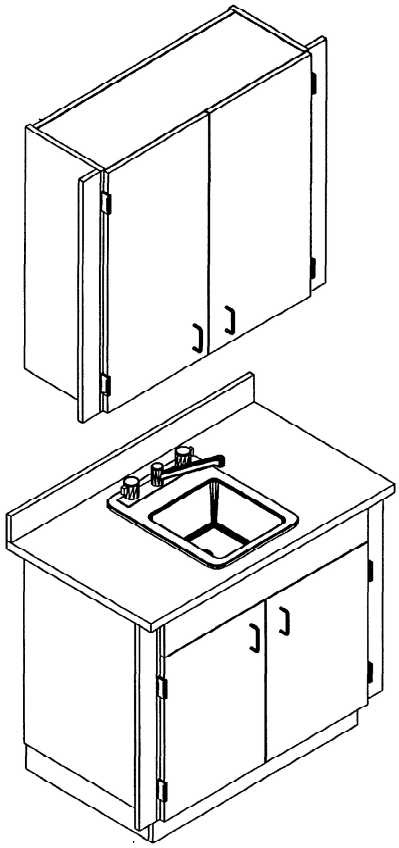

HLF FURNITURE

COFFEE STATION #1

PROJECT: CASEWORK

DEALER:

#

ACK #:

REF.:

ELEV.:

NOTES:

-ALL DIMENSIONS IN INCHES

-DRAWING NOT TO SCALE

DRAWN: D.BRANUM

DATE: 12-31-02

DRAWING #: 1a

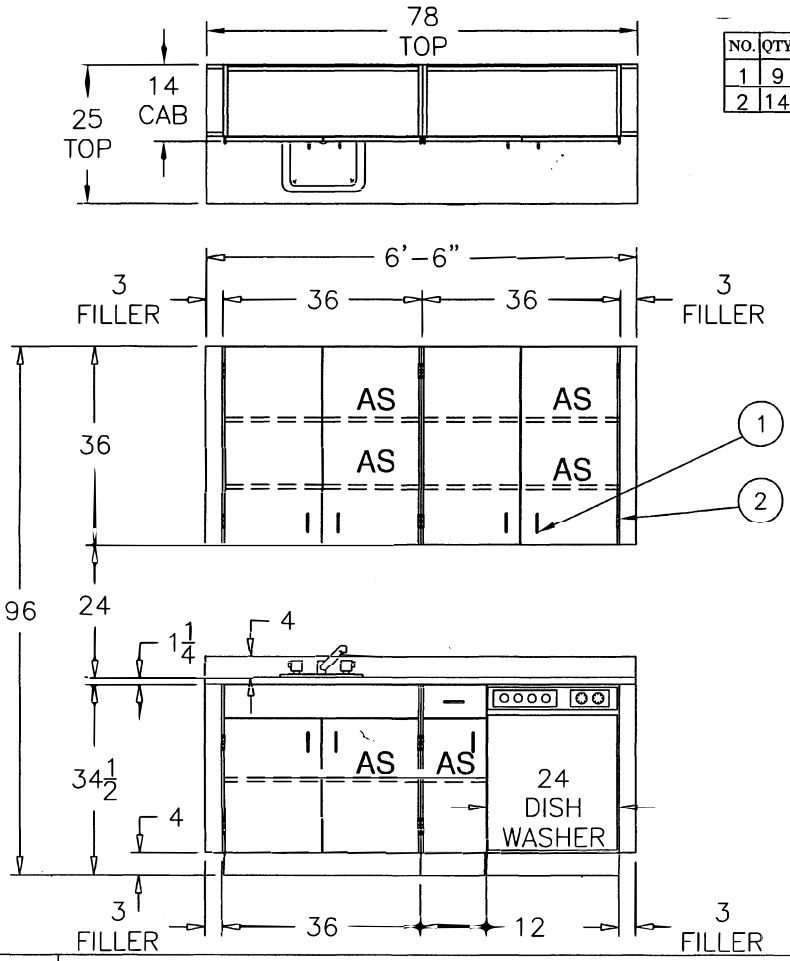

NO.	QTY.	HLF PART NO.	DISCRIPTION
1	9	03-71-001-001	96mm BRUSHED CHROME D-PULL
2	14	03-24-374	5 KNUCKLE HINGE BRUSHED CHROME

LIST PRICE: $XX

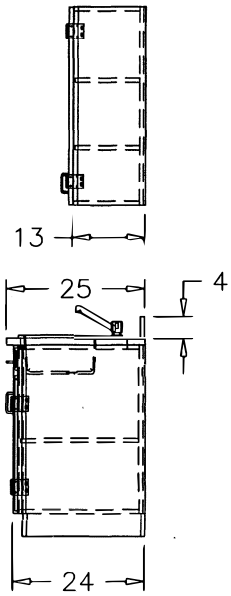

HLF FURNITURE

COFFEE STATION #2

PROJECT: CASEWORK

DEALER: #

ACK #:
REF.:
ELEV.:

NOTES:
-ALL DIMENSIONS IN INCHES
-DRAWING NOT TO SCALE

DRAWN: D.BRANUM
DATE: 12-31-02
DRAWING #: 2

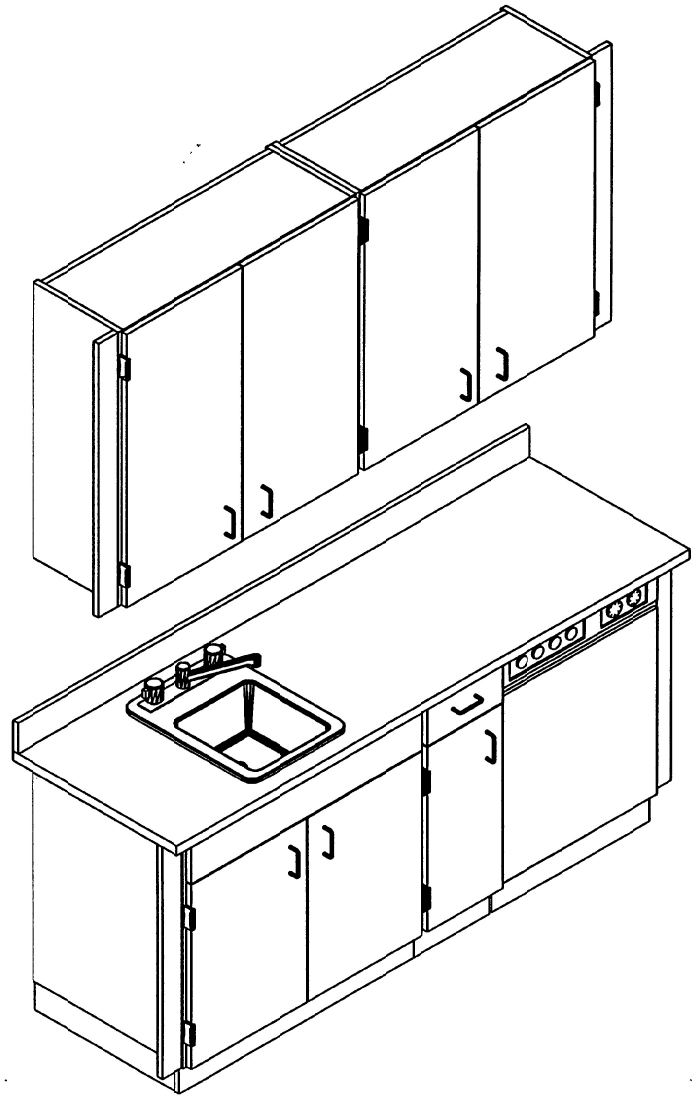

HLF FURNITURE

COFFEE STATION #2

PROJECT: *CASEWORK*

DEALER: #

ACK #:
REF.:
ELEV.:

NOTES:
-ALL DIMENSIONS IN INCHES
-DRAWING NOT TO SCALE

DRAWN: *D.BRANUM*
DATE: *12-31-02*
DRAWING #: 2a

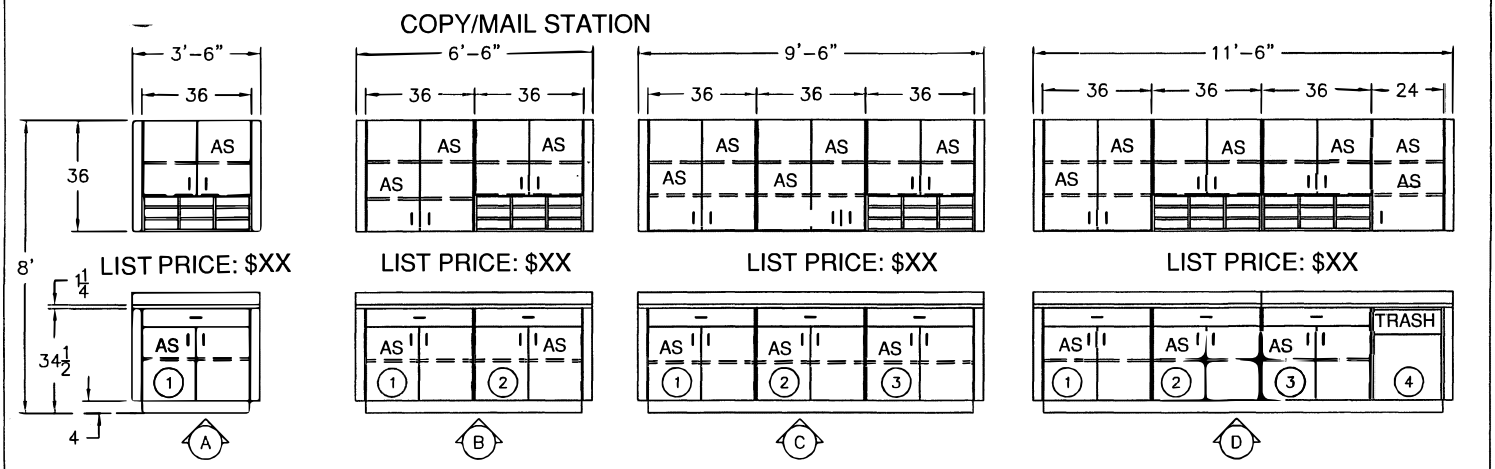

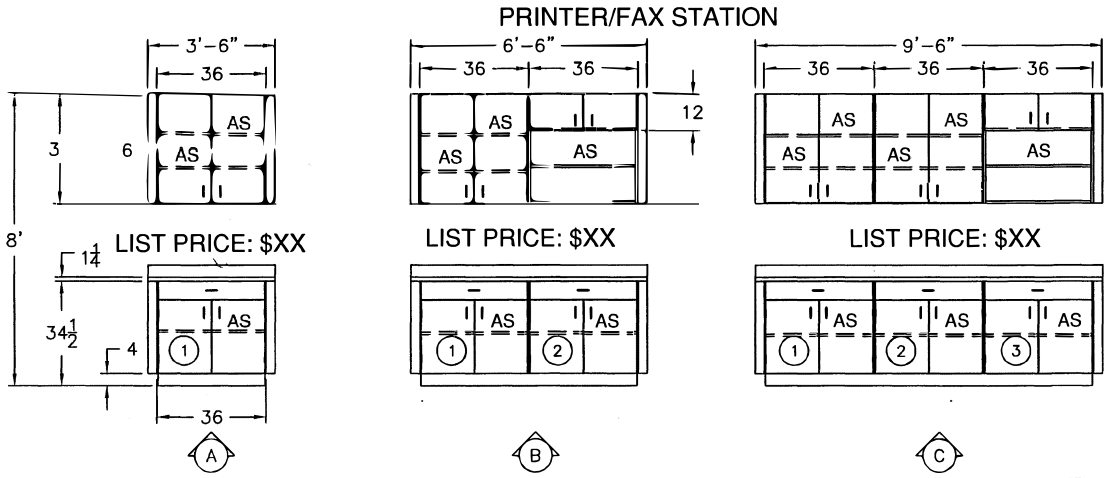

HLF FURNITURE

COPY/MAIL - PRINTER/FAX STATIONS

PROJECT: CASEWORK STANDARDS

DEALER:

#

ACK #:

REF.:

ELEV.:

NOTES:
-ALL DIMENSIONS IN INCHES
-DRAWING NOT TO SCALE

DRAWN: D.BRANUM

DATE: 1-3-03

DRAWING #: 2

COPY/MAIL STATION OPTIONS:

A - 3'-6" O.A.L.

1. BASE CABINET AND UPPER CABINET WITH (2) DOORS, ADJ. SHELF & MAIL SLOT UNIT
- FILLER PROVIDED

OPTION -1 (NOT SHOWN)
- BASE CABINET AND 24" UPPER CABINET MAIL SLOTS ONLY

B - 6'-6" O.A.L.

1. BASE CABINET AND UPPER CABINET WITH ADJ. SHELVES.
2. BASE CABINET AND UPPER CABINET WITH (2) DOORS, ADJ. SHELF & MAIL SLOT UNIT
- FILLERS PROVIDED

OPTION -1 (NOT SHOWN)
- BASE CABINET AND 24" OPEN UPPER CABINET WITH ADJ. SHELF
- BASE CABINET AND 24" UPPER CABINET MAIL SLOTS ONLY

C - 9'-6" O.A.L.

1. BASE CABINET AND UPPER CABINET WITH ADJ. SHELVES.
2. BASE CABINET AND UPPER CABINET WITH ADJ. SHELVES.
3. BASE CABINET AND UPPER CABINET WITH (2) DOORS, ADJ. SHELF & MAIL SLOT UNIT
- FILLERS PROVIDED

OPTION -1 (NOT SHOWN)
- BASE CABINET AND 24" OPEN UPPER CABINET WITH ADJ. SHELF
- BASE CABINET AND 24" OPEN UPPER CABINET WITH ADJ. SHELF
- BASE CABINET AND 24" UPPER CABINET MAIL SLOTS ONLY

D - 11'-6" O.A.L.

1. BASE CABINET AND UPPER CABINET WITH ADJ. SHELVES.
2. BASE CABINET AND UPPER CABINET WITH (2) DOORS, ADJ. SHELF & MAIL SLOT UNIT
3. BASE CABINET AND UPPER CABINET WITH (2) DOORS, ADJ. SHELF & MAIL SLOT UNIT
4. BASE TRASH CAN CABINET AND UPPER CABINET WITH (1) DOOR
- FILLERS PROVIDED

OPTION -1 (NOT SHOWN)
- BASE CABINET AND 24" OPEN UPPER CABINET WITH ADJ. SHELF
- BASE CABINET AND 24" OPEN UPPER CABINET WITH ADJ. SHELF
- BASE CABINET AND 24" UPPER CABINET MAIL SLOTS ONLY
- BASE TRASH CAN CABINET AND 24" SINGLE DOOR UPPER CABINET

PRINTER/FAX STATION OPTIONS:

A - 3'-6" O.A.L.

1. BASE CABINET AND UPPER CABINET WITH ADJ. SHELVES.
- FILLERS PROVIDED

B - 6'-6" O.A.L.

1. BASE CABINET AND UPPER CABINET WITH ADJ. SHELVES.
2. BASE CABINET AND UPPER CABINET WITH (2) DOORS AND ADJ. SHELVES
- FILLERS PROVIDED

C - 9'-6" O.A.L.

1. BASE CABINET AND UPPER CABINET WITH ADJ. SHELVES
2. BASE CABINET AND UPPER CABINET WITH ADJ. SHELVES
3. BASE CABINET AND UPPER CABINET WITH (2) DOORS AND ADJ. SHELVES
- FILLERS PROVIDED

HLF FURNITURE

COPY/MAIL - PRINTER/FAX NOTES

PROJECT: CASEWORK STANDARDS

DEALER: #

ACK #:
REF.:
ELEV.:

NOTES:
-ALL DIMENSIONS IN INCHES
-DRAWING NOT TO SCALE

DRAWN: D.BRANUM
DATE: 1-3-03
DRAWING #: 2a

LIST PRICE: $XX

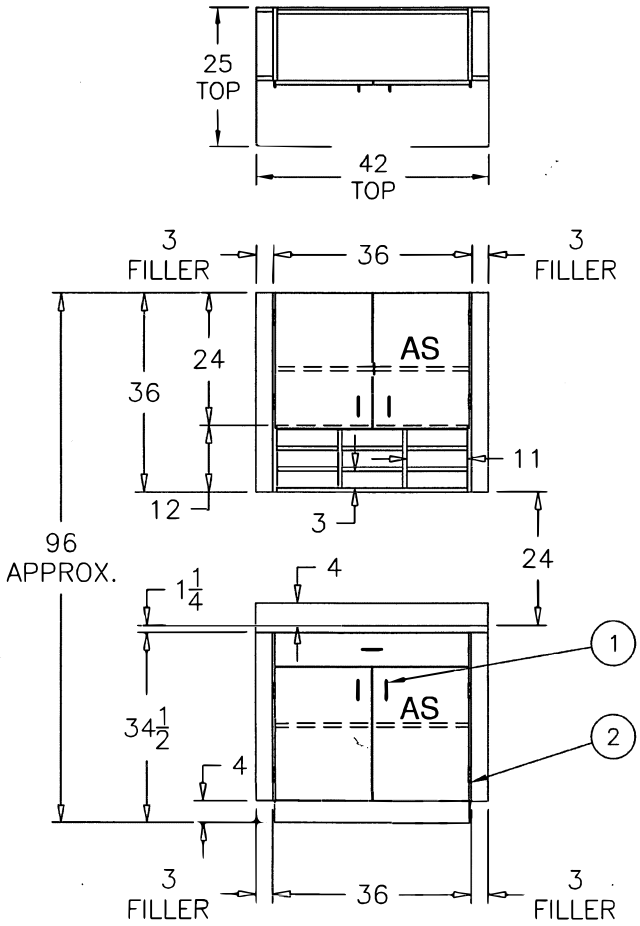

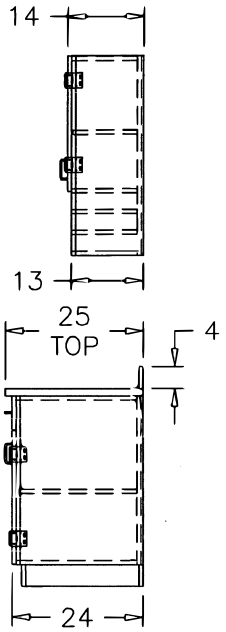

NO.	QTY	HLF PART NO.	DISCRIPTION
2	8	03-24-374	5 KNUCKLE HINGE BRUSHED CHROME
1	5	03-71-001-001	96mm BRUSHED CHROME D-PULL

HLF FURNITURE

COPY/MAIL STATION #1

PROJECT: CASEWORK

DEALER: #

ACK #:
REF.:
ELEV.:

NOTES:
-ALL DIMENSIONS IN INCHES
-DRAWING NOT TO SCALE

DRAWN: D.BRANUM
DATE: 10-28-02
DRAWING #: 1

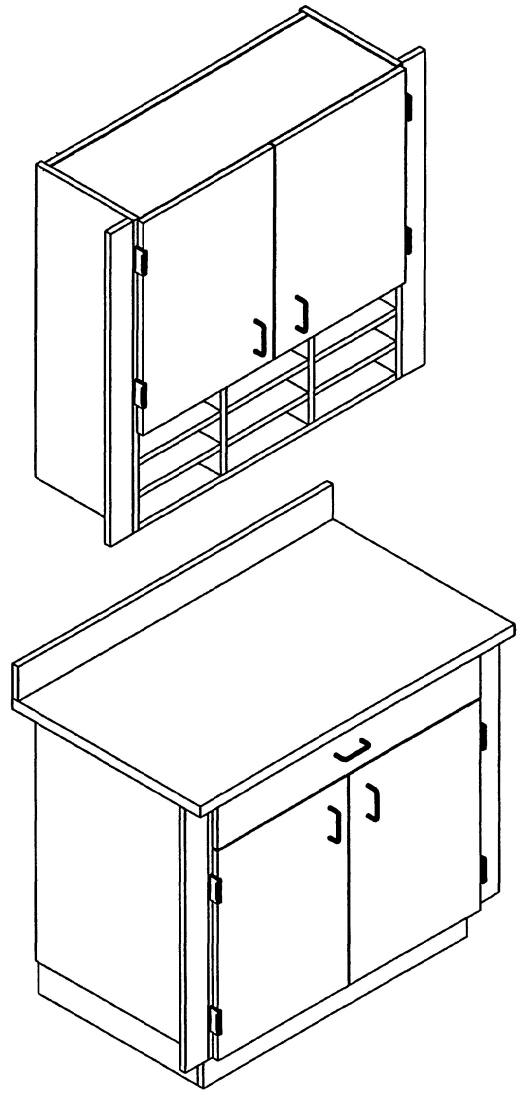

HLF FURNITURE

COPY/MAIL STATION #1

PROJECT: CASEWORK

DEALER:

#

ACK #:

REF.:

ELEV.:

NOTES:

-ALL DIMENSIONS IN INCHES

-DRAWING NOT TO SCALE

DRAWN: D.BRANUM

DATE: 10-28-02

DRAWING #: 1a

NO.	QTY	HLF PART NO.	DISCRIPTION
1	8	03-71-001-001	96mm BRUSHED CHROME D-PULL
2	16	03-24-374	5 KNUCKLE HINGE BRUSHED CHROME

LIST PRICE: $XX

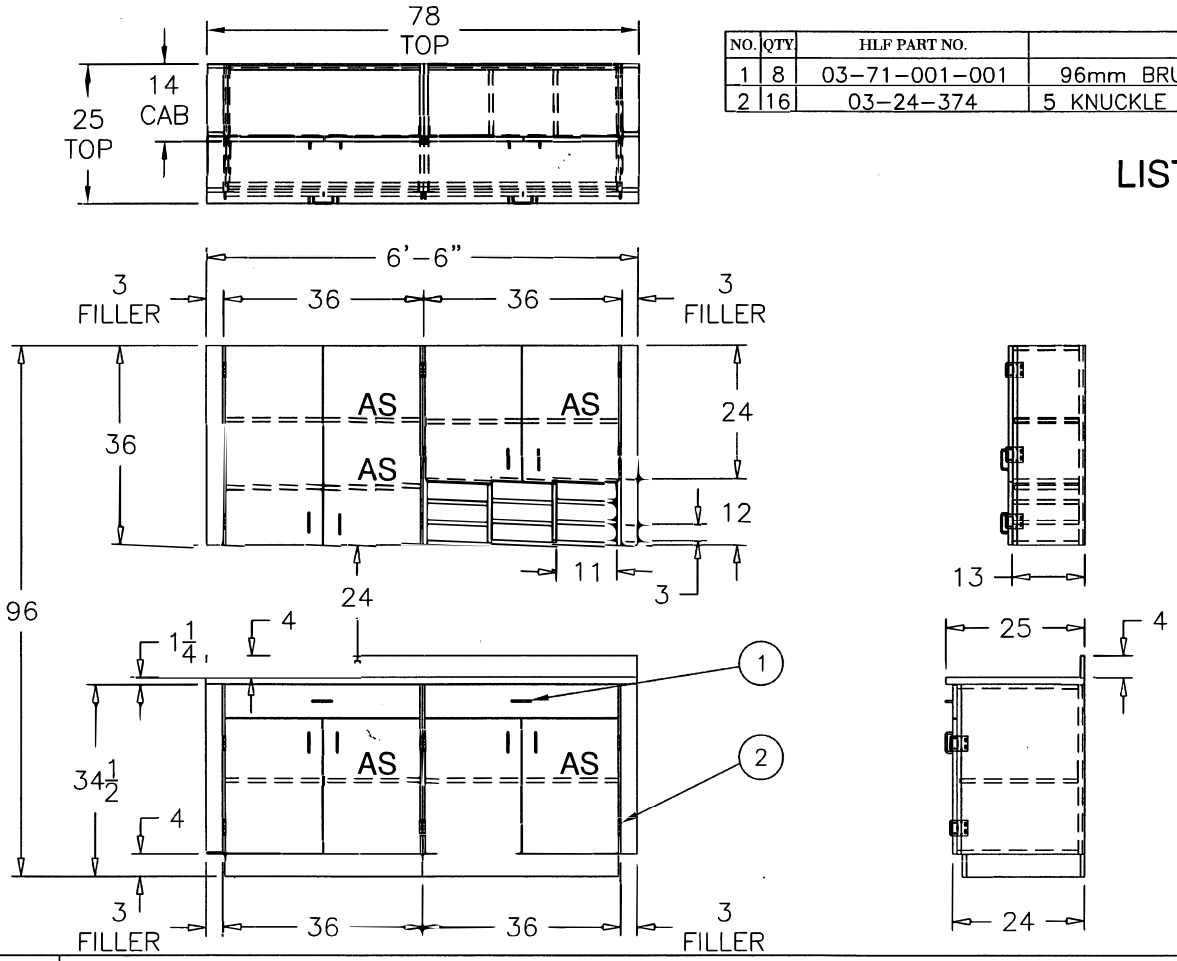

COPY/MAIL STATION #2

HLF FURNITURE

PROJECT: CASEWORK

DEALER: #

ACK #:

REF.:

ELEV.:

NOTES:
-ALL DIMENSIONS IN INCHES
-DRAWING NOT TO SCALE

DRAWN: D.BRANUM

DATE: 10-28-02

DRAWING #: 2

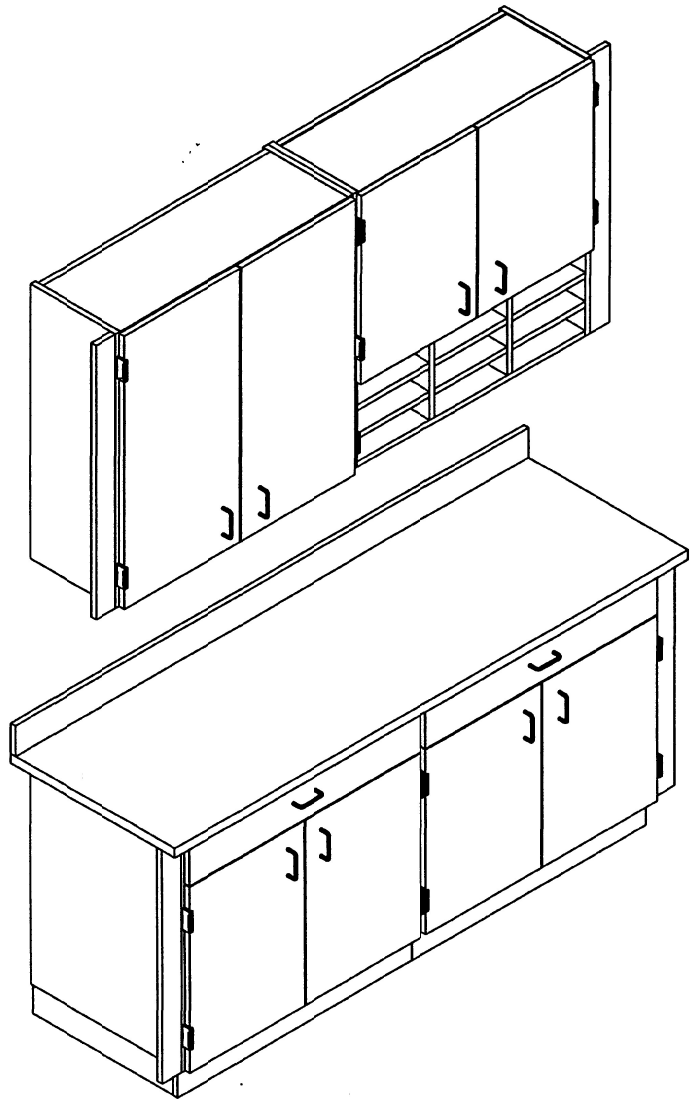

HLF FURNITURE

COPY/MAIL STATION - #2

PROJECT: CASEWORK

DEALER: #

ACK #:

REF.:

ELEV.:

NOTES:

-ALL DIMENSIONS IN INCHES

-DRAWING NOT TO SCALE

DRAWN: D.BRANUM

DATE: 10-28-02

DRAWING #: 2a

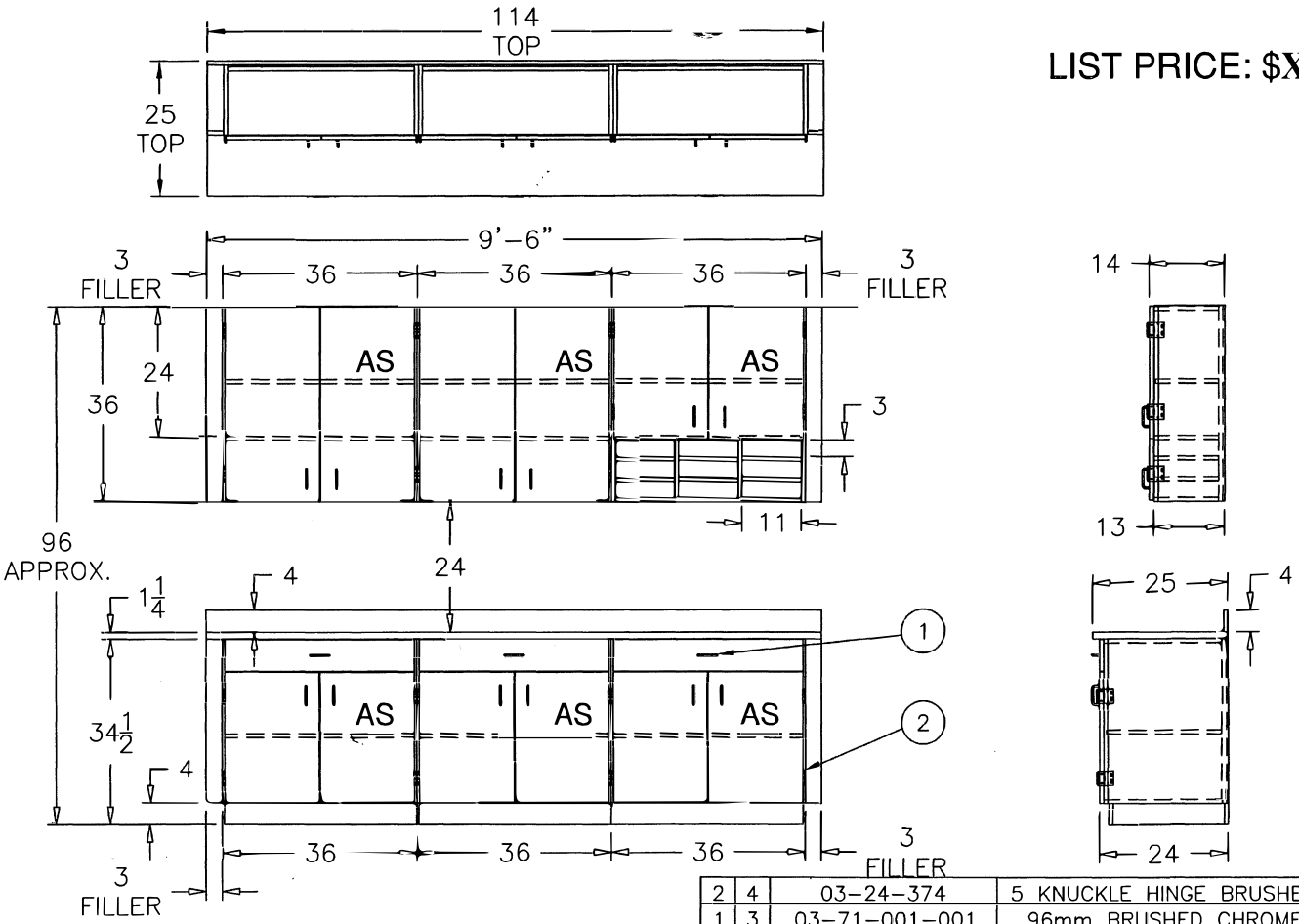

LIST PRICE: $XX

NO.	QTY	HLF PART NO.	DISCRIPTION
2	4	03-24-374	5 KNUCKLE HINGE BRUSHED CHROME
1	3	03-71-001-001	96mm BRUSHED CHROME D-PULL

HLF FURNITURE

COPY/MAIL STATION #3

PROJECT: CASEWORK

DEALER: #

ACK #:
REF.:
ELEV.:

NOTES:
-ALL DIMENSIONS IN INCHES
-DRAWING NOT TO SCALE

DRAWN: D.BRANUM
DATE: 10-28-02
DRAWING #: 3

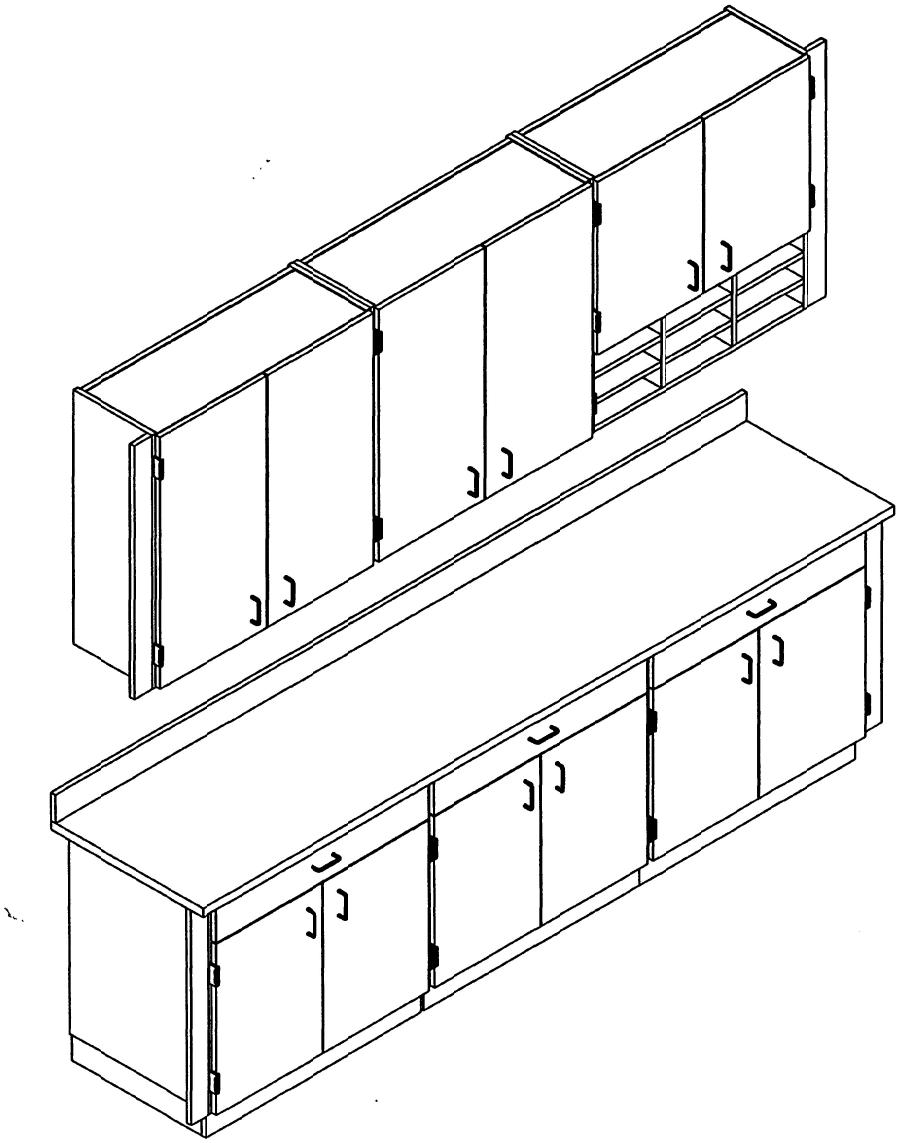

HLF FURNITURE

COPY/MAIL STATION #3

PROJECT: CASEWORK

DEALER: #

ACK #:

REF.:

ELEV.:

NOTES:

-ALL DIMENSIONS IN INCHES

-DRAWING NOT TO SCALE

DRAWN: D.BRANUM

DATE: 10-28-02

DRAWING #: 3a

LIST PRICE: $XX

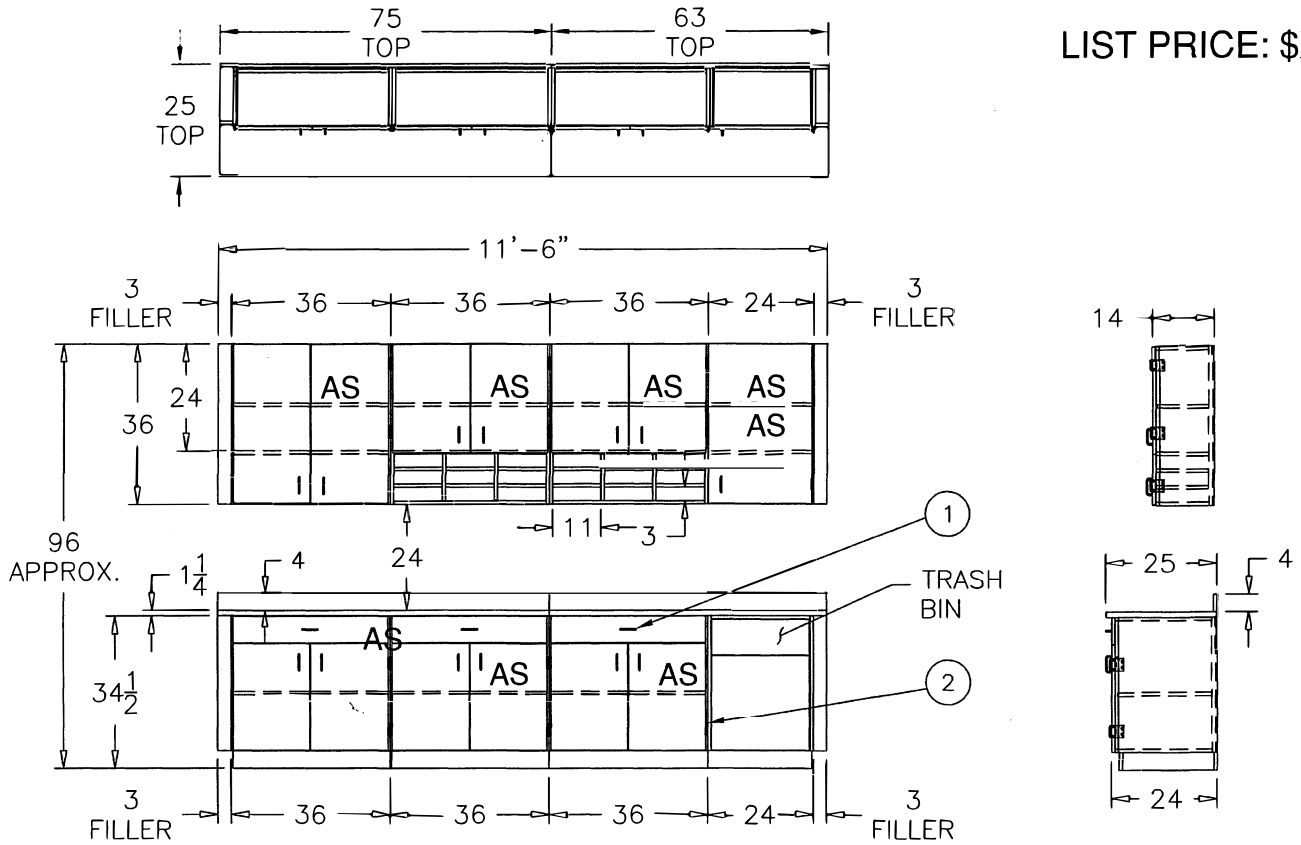

NO.	QTY.	HLF PART NO.	DISCRIPTION
2	26	03-24-374	5 KNUCKLE HINGE BRUSHED CHROME
1	16	03-71-001-001	96mm BRUSHED CHROME D-PULL

HLF FURNITURE

COPY/MAIL STATION #4

PROJECT: CASEWORK

DEALER: #

ACK #:
REF.:
ELEV.:

NOTES:
-ALL DIMENSIONS IN INCHES
-DRAWING NOT TO SCALE

DRAWN: D.BRANUM
DATE: 10-29-02
DRAWING #: 4

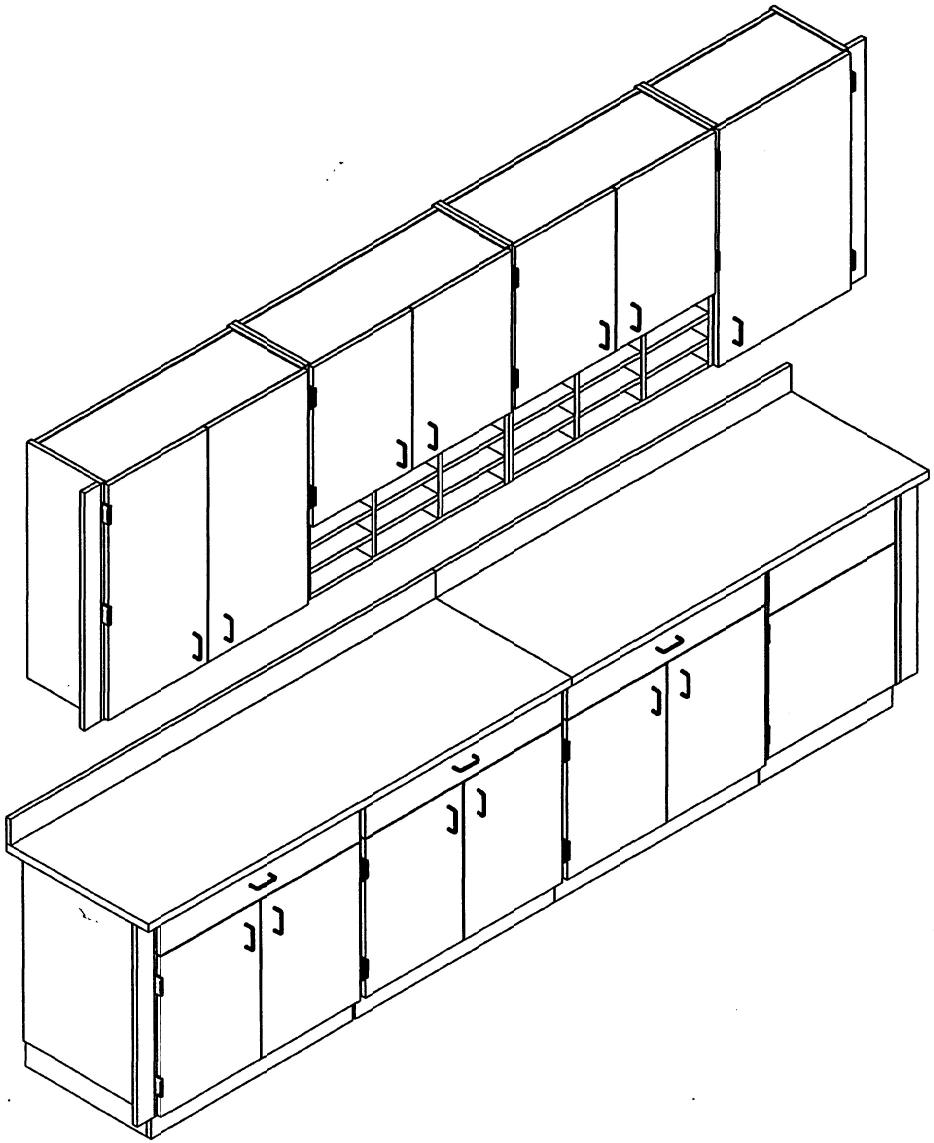

HLF FURNITURE

COPY/MAIL STATION #4

PROJECT: CASEWORK

DEALER: #

ACK #:

REF.:

ELEV.:

NOTES:

-ALL DIMENSIONS IN INCHES

-DRAWING NOT TO SCALE

DRAWN: D.BRANUM

DATE: 10-29-02

DRAWING #: 4a

LIST PRICE: $XX

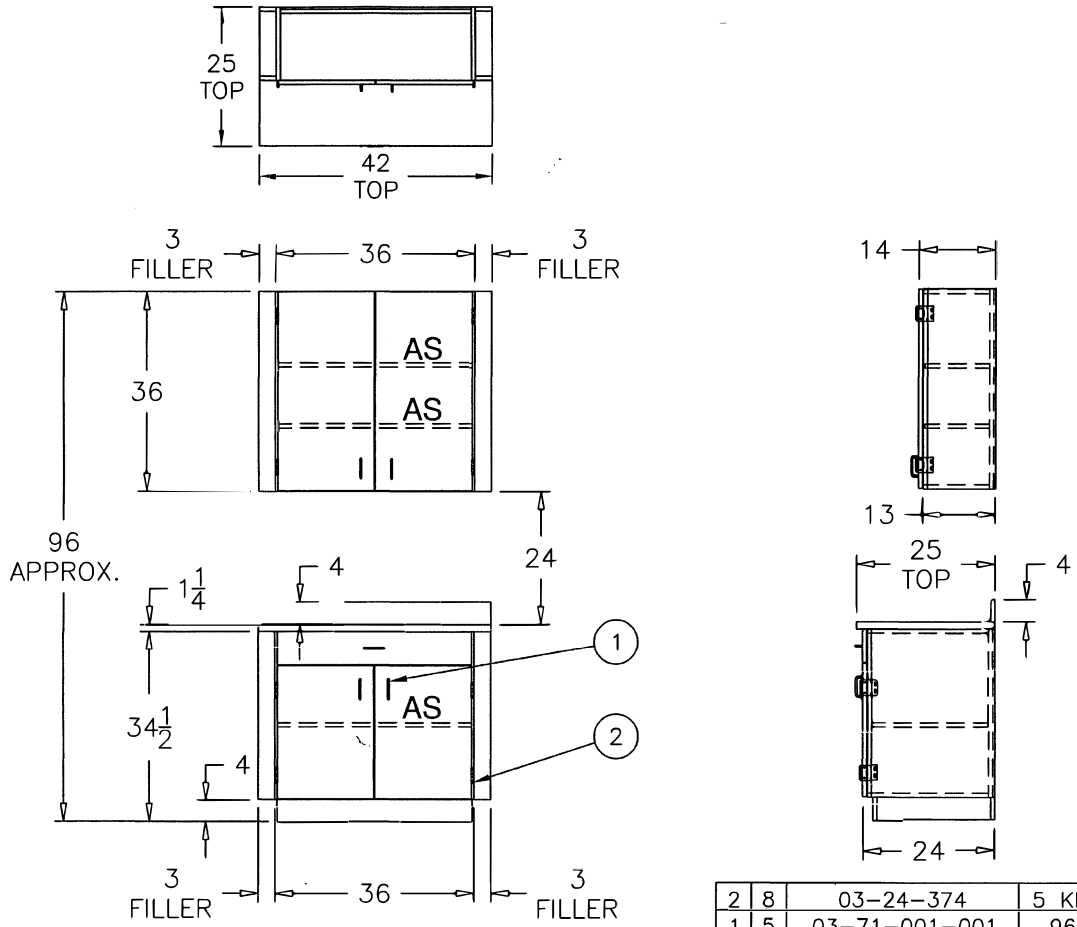

NO.	QTY.	HLF PART NO.	DISCRIPTION
2	8	03-24-374	5 KNUCKLE HINGE BRUSHED CHROME
1	5	03-71-001-001	96mm BRUSHED CHROME D-PULL

HL F
FURNITURE

PRINTER/FAX STATION #1

PROJECT: CASEWORK
DEALER: #

ACK #:
REF.:
ELEV.:

NOTES:
-ALL DIMENSIONS IN INCHES
-DRAWING NOT TO SCALE

DRAWN: D.BRANUM
DATE: 12-30-02
DRAWING #: 1

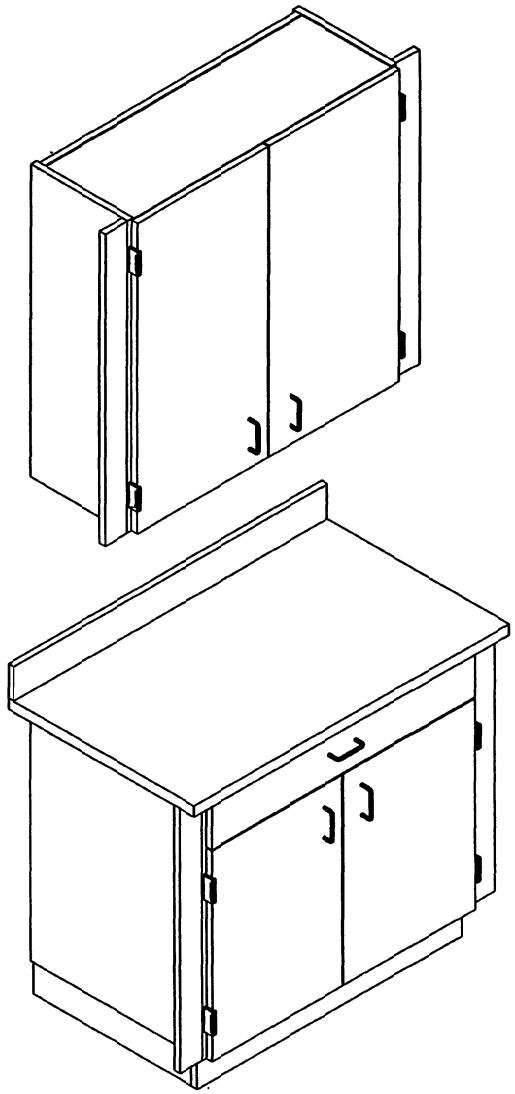

HLF FURNITURE

PRINTER/FAX STATION #1

PROJECT: CASEWORK

DEALER: #

ACK #:

REF.:

ELEV.:

NOTES:

-ALL DIMENSIONS IN INCHES

-DRAWING NOT TO SCALE

DRAWN: D.BRANUM

DATE: 12-30-02

DRAWING #: 1a

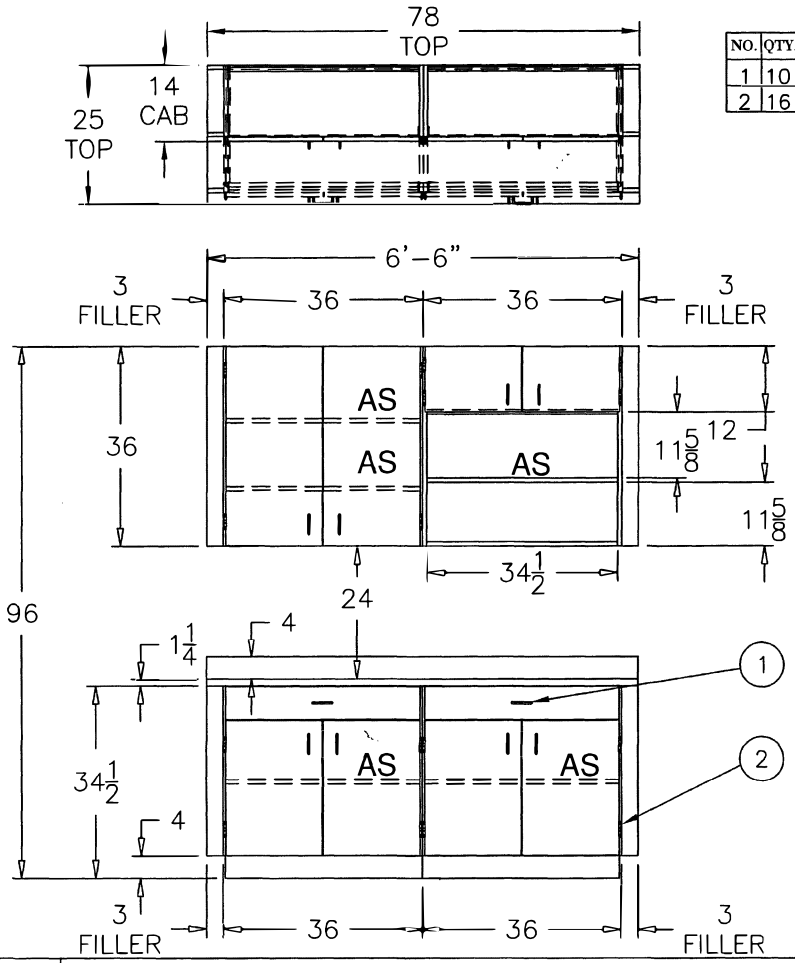

NO.	QTY	HLF PART NO.	DISCRIPTION
1	10	03-71-001-001	96mm BRUSHED CHROME D-PULL
2	16	03-24-374	5 KNUCKLE HINGE BRUSHED CHROME

LIST PRICE: $XX

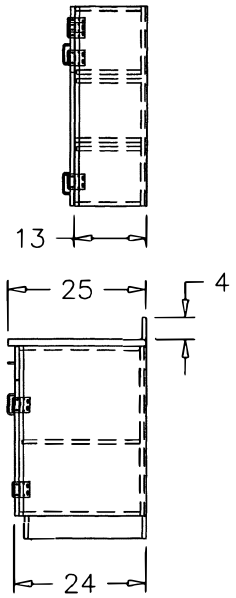

HLF FURNITURE

PRINTER/FAX STATION #2

PROJECT: CASEWORK

DEALER: #

ACK #:
REF.:
ELEV.:

NOTES:
-ALL DIMENSIONS IN INCHES
-DRAWING NOT TO SCALE

DRAWN: D.BRANUM
DATE: 12-30-02
DRAWING #: 2

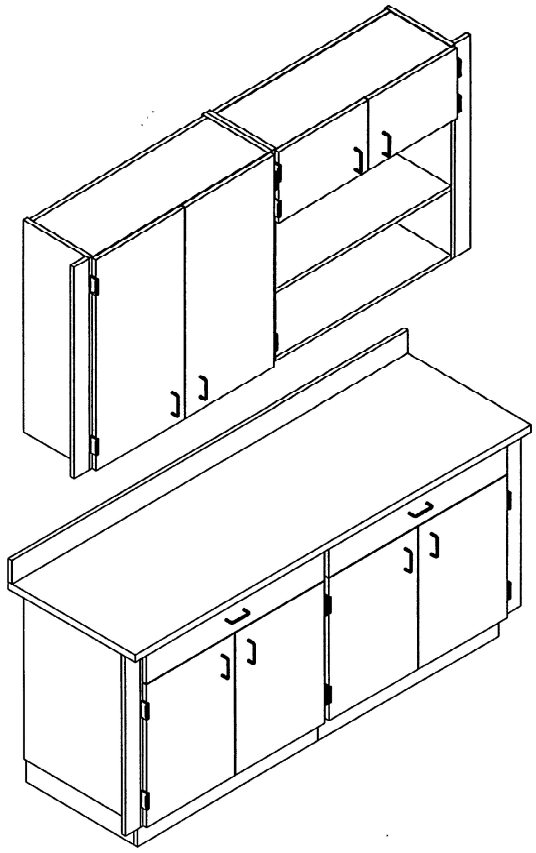

HLF FURNITURE

PRINTER/FAX STATION #2

PROJECT: CASEWORK

DEALER: #

ACK #:

REF.:

ELEV.:

NOTES:
-ALL DIMENSIONS IN INCHES
-DRAWING NOT TO SCALE

DRAWN: D.BRANUM

DATE: 12-30-02

DRAWING #: 2a

LIST PRICE: $XX

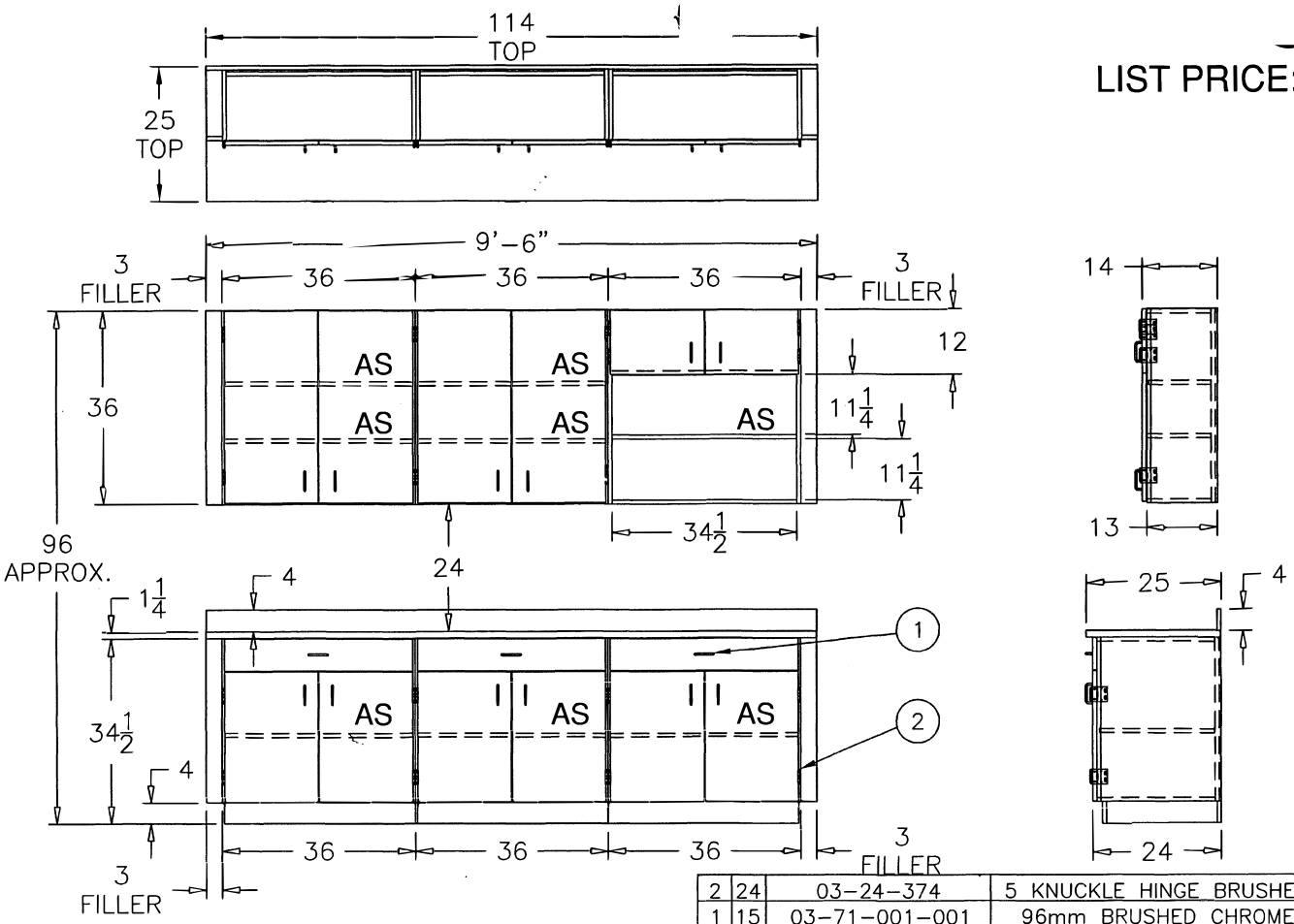

NO.	QTY.	HLF PART NO.	DISCRIPTION
2	24	03-24-374	5 KNUCKLE HINGE BRUSHED CHROME
1	15	03-71-001-001	96mm BRUSHED CHROME D-PULL

HLF FURNITURE

PRINTER/FAX STATION #3

PROJECT: CASEWORK

DEALER: #

ACK #:

REF.:

ELEV.:

NOTES:
-ALL DIMENSIONS IN INCHES
-DRAWING NOT TO SCALE

DRAWN: D.BRANUM

DATE: 12-31-02

DRAWING #: 3

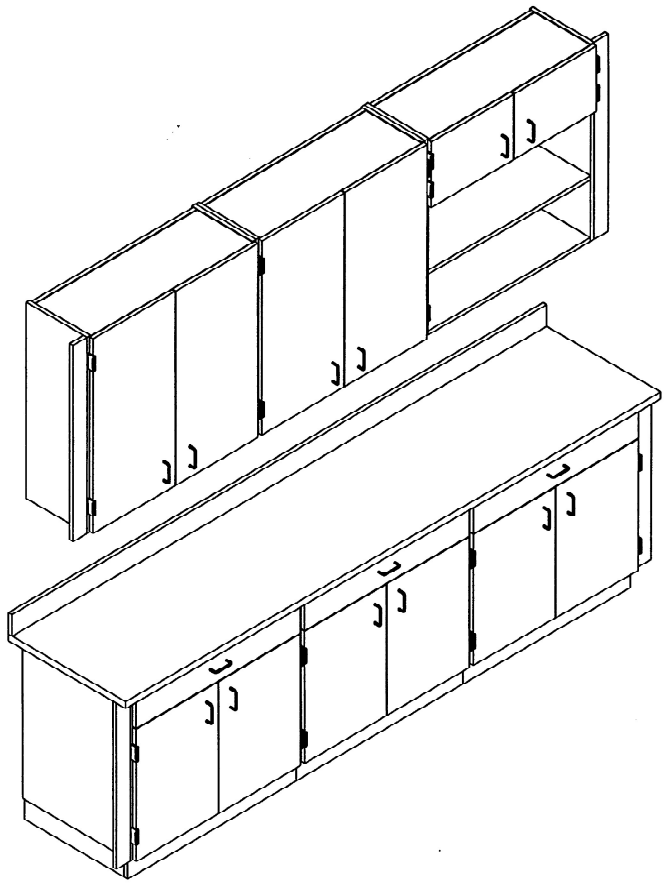

HLF FURNITURE

PRINTER/FAX STATION #3

PROJECT: CASEWORK

DEALER: #

ACK #:

REF.:

ELEV.:

NOTES:

-ALL DIMENSIONS IN INCHES

-DRAWING NOT TO SCALE

DRAWN: D.BRANUM

DATE: 1-02-03

DRAWING #: 3a